YANMAR

PARTS CATALOG

0CD50-M03350EN

Last update Aug., 2017

PREFACE

This parts catalog is the 1st edition of 3TNM68-AZN for TRYSUN.

Published : August, 2017

Contents

0CD50-M03350

Fig. No.	Fig. Name
ENGINE	
1.	CYLINDER BLOCK
2.	GEAR HOUSING
3.	MOUNTING FLANGE & OIL SUMP
4.	CYLINDER HEAD & BONNET
5.	EXHAUST MANIFOLD
6.	CAMSHAFT & DRIVING GEAR
7.	CRANKSHAFT & PISTON
8.	LUB. OIL SYSTEM
9.	COOLING WATER SYSTEM
10.	FUEL INJECTION PUMP
11.	GOVERNOR
12.	FUEL INJECTION VALVE
13.	FUEL PIPE
14.	STARTER MOTOR
15.	GENERATOR
16.	ACCESSORY

Fig.1. CYLINDER BLOCK

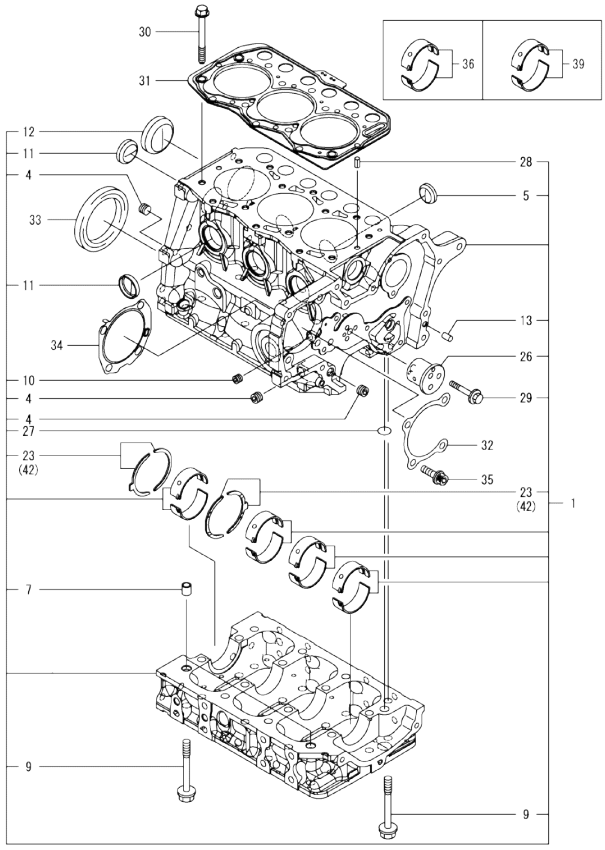

(A)=3TNM68-AZN
(B)=
(C)=
(D)=
(E)=
(F)=

No.	Lev.	Parts No.	Description	Q'ty (A)	(B)	(C)	(D)	(E)	(F)	I	R
1	1	119127-01560	BLOCK ASSY, CYLINDER	1							
4	2	124060-01050	PLUG, PT1/8	3							
5	2	119125-01970	PLUG, CUP TYPE 25	3							
7	2	119125-01960	PIPE, DOWEL L=12	2							
9	2	119125-02061	BOLT, METAL CAP	16							
10	2	23876-005000	PLUG, R005	1							
11	2	27241-300000	PLUG 30	4							
12	2	27241-450000	PLUG, 45	1							
13	2	119620-01620	PIN, PARALLEL M6X10	2							
23	2	119125-02930	BEARING ASSY, THRUST	2							
26	2	119125-25050	SHAFT, IDLE GEAR	1							
27	2	129900-32040	O-RING, P14	1							
28	2	22351-060012	PIN, SPRING 6.0X12	2							
29	2	26106-060402	BOLT, M6X 40 PLATED	3							
30	1	119266-01200	BOLT, CYLINDER HEAD	14							
31	1	119125-01330	GASKET, HEAD	1							
32	1	119125-01790	GASKET	1							
33	1	119734-02220	SEAL, OIL	1							
34	1	119125-51800	GASKET	1							
35	1	119125-01800	BOLT, FLANGE M8X25	4							
36	1	119125-02900	BEARING ASSY, MAIN	4							1
39	1	119125-02910	BEARING ASSY, MAIN	4							2
42	1	119125-02940	BEARING, THRUST 0.25	2							3

Remarks
(1)Spare parts.
(2)Under-sized(U.S.=0.25) parts.
(3)Over-sized(O.S.=0.25) parts.

N:Old $\frac{\text{Yes}}{\text{No}}$ New. Q:Old $\frac{\text{No}}{\text{Yes}}$ New. R:Old $\frac{\text{Yes}}{\text{Yes}}$ New. S:Old $\frac{\text{No}}{\text{No}}$ New. W:Add. Z:Discontinued. F:Interchangeable by set. K:Q'ty Change

Copyright (C) 2017 YANMAR CO., LTD. All RightsReserved.

Fig.2. GEAR HOUSING

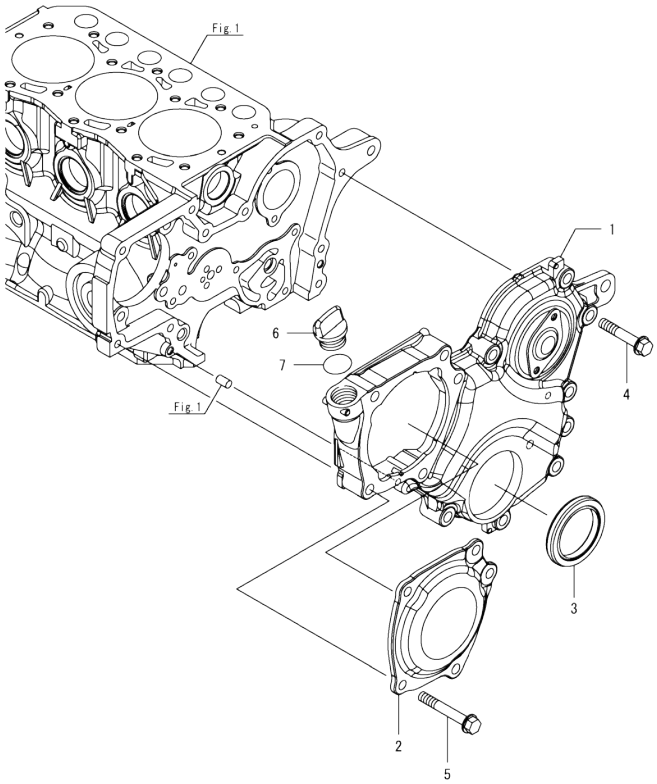

(A)=3TNM68-AZN
(B)=
(C)=
(D)=
(E)=
(F)=

No.	Lev.	Parts No.	Description	Q'ty (A)	(B)	(C)	(D)	(E)	(F)	I	R
1	1	119125-01500	COVER, GEAR CASE	1							
2	1	119125-01750	COVER, PUMP	1							
3	1	119717-01800	SEAL, OIL	1							
4	1	26106-080352	BOLT, M8X 35 PLATED	8							
5	1	26106-080452	BOLT, M8X 45 PLATED	5							
6	1	106760-01770	CAP, FILLER	1							
7	1	24311-000180	O-RING, 1AP18.0	1							

N:Old ←Yes/No→ New. Q:Old ←No/Yes→ New. R:Old ←Yes/Yes→ New. S:Old ←No/No→ New. W:Add. Z:Discontinued. F:Interchangeable by set. K:Q'ty Change

Copyright (C) 2017 YANMAR CO., LTD. All RightsReserved.

Fig.3. MOUNTING FLANGE & OIL SUMP

(A)=3TNM68-AZN
(B)=
(C)=
(D)=
(E)=
(F)=

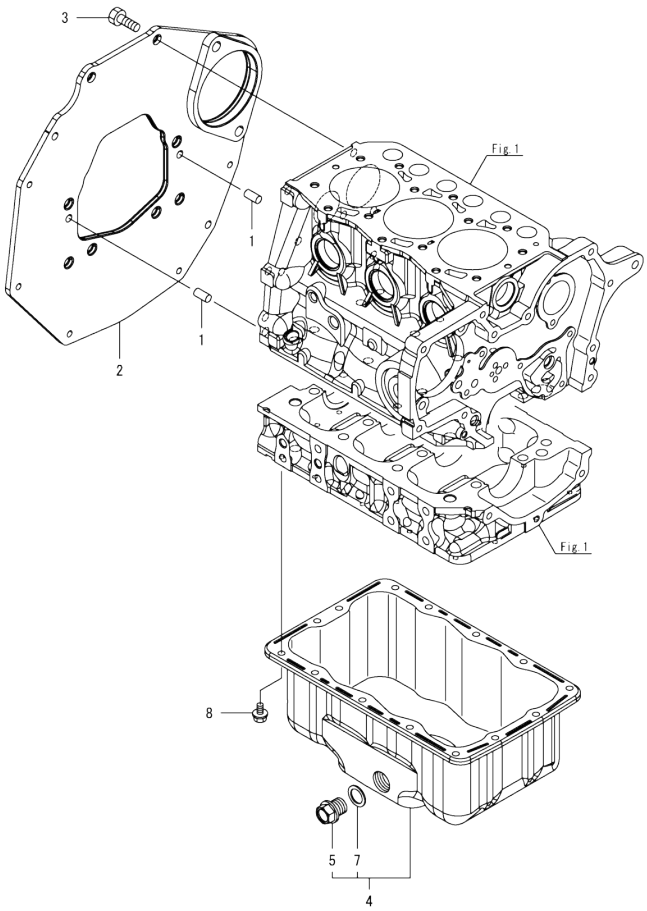

No.	Lev.	Parts No.	Description	Q'ty (A)	(B)	(C)	(D)	(E)	(F)	I	R
1	1	129100-01580	PIN, PARALLEL 8X16	2							
2	1	119D00-01660	FLANGE, MOUNTING	1							
3	1	26206-100202	BOLT, M10X 20 PLATED	8							
4	1	119125-01770	OIL PAN ASSY	1							
5	2	105425-01690	PLUG, M16	1							
7	2	22190-160002	WASHER, SEAL 16	1							
8	1	119125-01780	BOLT, TORX M6X10	14							

N:Old ←Yes/No→ New. Q:Old ←No/Yes→ New. R:Old ←Yes/Yes→ New. S:Old ←No/No→ New. W:Add. Z:Discontinued. F:Interchangeable by set. K:Q'ty Change

Copyright (C) 2017 YANMAR CO., LTD. All RightsReserved.

Fig.4. CYLINDER HEAD & BONNET

(A)=3TNM68-AZN
(B)=
(C)=
(D)=
(E)=
(F)=

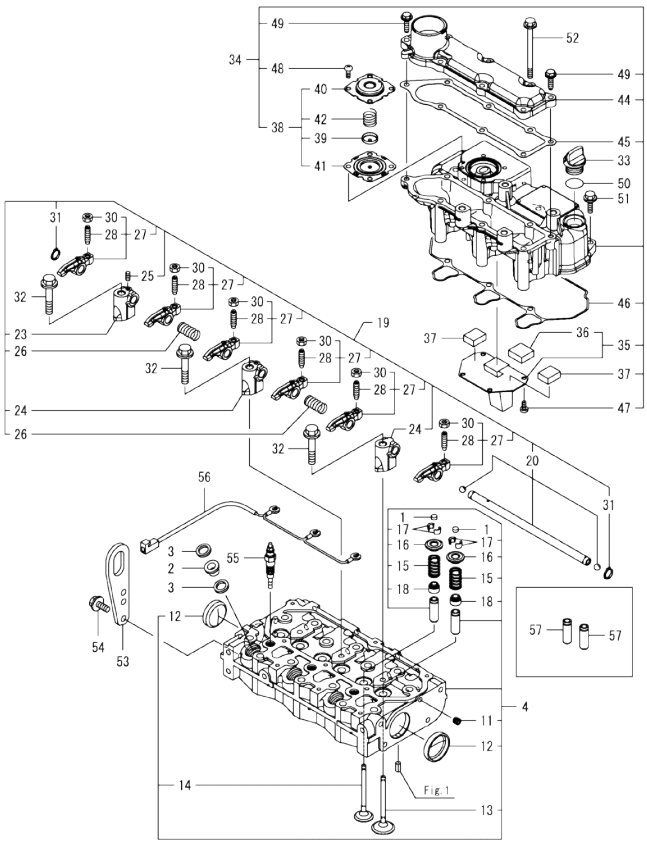

No.	Lev.	Parts No.	Description	Q'ty (A)	(B)	(C)	(D)	(E)	(F)	I	R
1	1	119260-11370	CAP, VALVE	6							
2	1	129901-11450	PROTECTOR, NOZZLE	3							
3	1	119600-11460	GASKET, NOZZLE	6							
4	1	119125-11740	HEAD ASSY, CYLINDER	1							
11	2	23876-005000	PLUG, R005	1							
12	2	27241-350000	PLUG, 35	2							
13	2	119125-11100	VALVE, SUCTION	3							
14	2	119125-11110	VALVE, EXHAUST	3							
15	2	119125-11130	SPRING, VALVE	6							
16	2	119125-11180	RETAINER, SPRING	6							
17	2	119125-11190	COTTER, VALVE	12							
18	2	119125-11340	SEAL, VALVE STEM	6							
19	1	119125-11200	SUPPORT ASSY, ROCKER	1							
20	2	119125-11240	SHAFT ASSY, ROCKER	1							
23	2	119125-11260	SUPPORT, ROCKER ARM	1							
24	2	119125-11270	SUPPORT, ROCKER ARM	2							
25	2	119260-11270	SCREW	1							
26	2	119260-11280	SPRING, ROCKER	2							
27	2	119125-11650	ARM ASSY, ROCKER	6							
28	3	105010-11230	SCREW, VALVE ADJUST	6							
30	3	26856-060002	NUT, M6	6							
31	2	22242-000100	RING, 10	2							
32	1	26106-080452	BOLT, M8X 45 PLATED	3							
33	1	106760-01770	CAP, FILLER	1							
34	1	119125-11380	BONNET ASSY, HEAD	1							
35	2	119717-03031	PLATE, BAFFLE	1							
36	3	119717-03070	BAFFLE, BREATHER	1							
37	2	119717-03070	BAFFLE, BREATHER	2							
38	2	119802-03100	DIAPHRAGM ASSY	1							
39	3	119802-03110	PLATE, DIAPHRAGM	1							
40	3	119802-03121	COVER, DIAPHRAGM	1							
41	3	119802-03131	DIAPHRAGM	1							
42	3	119802-03141	SPRING, DIAPHRAGM	1							
44	2	119125-11320	COVER, BONNET	1							
45	2	119125-11330	GASKET, BONNET	1							
46	2	119125-11370	GASKET, BONNET	1							
47	2	22857-500100	SCREW, 5X10	4							
48	2	22857-500100	SCREW, 5X10	4							
49	2	26476-060202	SCREW, TAPPING M6X20	2							
50	1	24311-000180	O-RING, 1AP18.0	1							
51	1	26106-060202	BOLT, M6X 20 PLATED	3							
52	1	26106-060802	BOLT, M6X 80 PLATED	6							
53	1	119226-07900	LIFTER, ENGINE	1							
54	1	26106-080162	BOLT, M8X 16 PLATED	2							
55	1	119125-77800	PLUG, GLOW	3							
56	1	119125-77820	CONNECTOR, GLOW PLUG	1							
57	1	119125-11800	GUIDE, VALVE	6							1

Remarks
(1)Spare parts.

N:Old ←Yes/No→ New. Q:Old ←No/Yes→ New. R:Old ←Yes/Yes→ New. S:Old ←No/No→ New. W:Add. Z:Discontinued. F:Interchangeable by set. K:Q'ty Change

Copyright (C) 2017 YANMAR CO., LTD. All RightsReserved.

Fig.5. EXHAUST MANIFOLD

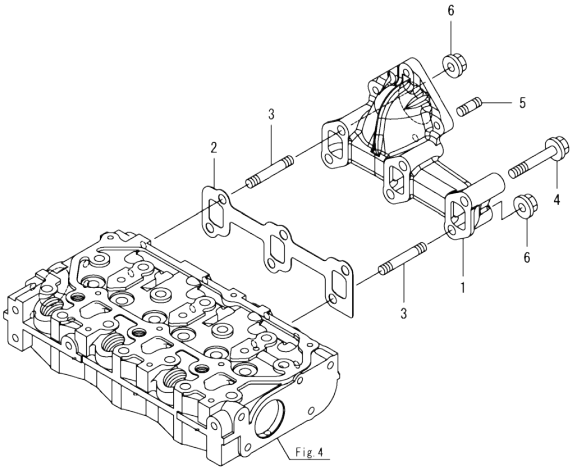

(A)=3TNM68-AZN
(B)=
(C)=
(D)=
(E)=
(F)=

No.	Lev.	Parts No.	Description	Q'ty (A)	(B)	(C)	(D)	(E)	(F)	I	R
1	1	119125-13100	MANIFOLD, EXHAUST	1							
2	1	119125-13110	GASKET, EXH.MANIFOLD	1							
3	1	119717-13600	BOLT, STUD M8X50	2							
4	1	129E00-13610	BOLT, M8X50 10.9	4							
5	1	119131-18320	BOLT, STUD M8X22	4							
6	1	26306-080002	NUT, M8	2							

N:Old ◄Yes/No► New. Q:Old ◄No/Yes► New. R:Old ◄Yes/Yes► New. S:Old ◄No/No► New. W:Add. Z:Discontinued. F:Interchangeable by set. K:Q'ty Change

Copyright (C) 2017 YANMAR CO., LTD. All RightsReserved.

Fig.6. CAMSHAFT & DRIVING GEAR

(A)=3TNM68-AZN
(B)=
(C)=
(D)=
(E)=
(F)=

No.	Lev.	Parts No.	Description	Q'ty (A)	(B)	(C)	(D)	(E)	(F)	I	R
1	1	119260-14200	TAPPET	6							
2	1	119260-14400	PUSH-ROD	6							
3	1	119125-14580	CAMSHAFT ASSY	1							
8	1	26106-060122	BOLT, M6X 12 PLATED	2							
9	1	119125-25100	GEAR ASSY, IDLE	1							
12	1	129150-25301	BOLT	4							
13	1	119125-25930	GEAR, PUMP	1							
14	1	119125-25910	BUSH, IDLE GEAR	1							1
15	1	119717-51150	FLANGE	1							

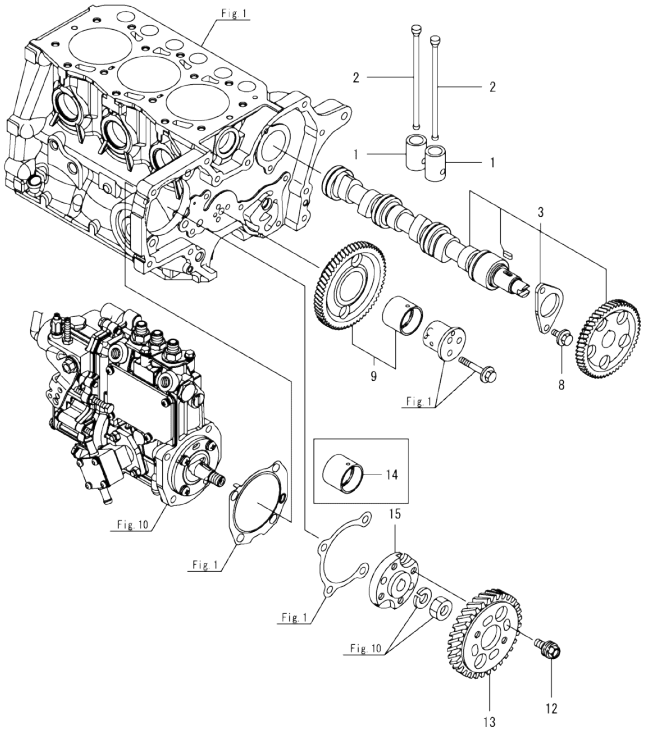

Remarks
(1)Spare parts.

N:Old ←Yes/No→ New. Q:Old ←No/Yes→ New. R:Old ←Yes/Yes→ New. S:Old ←No/No→ New. W:Add. Z:Discontinued. F:Interchangeable by set. K:Q'ty Change

Copyright (C) 2017 YANMAR CO., LTD. All RightsReserved.

Fig.7. CRANKSHAFT & PISTON

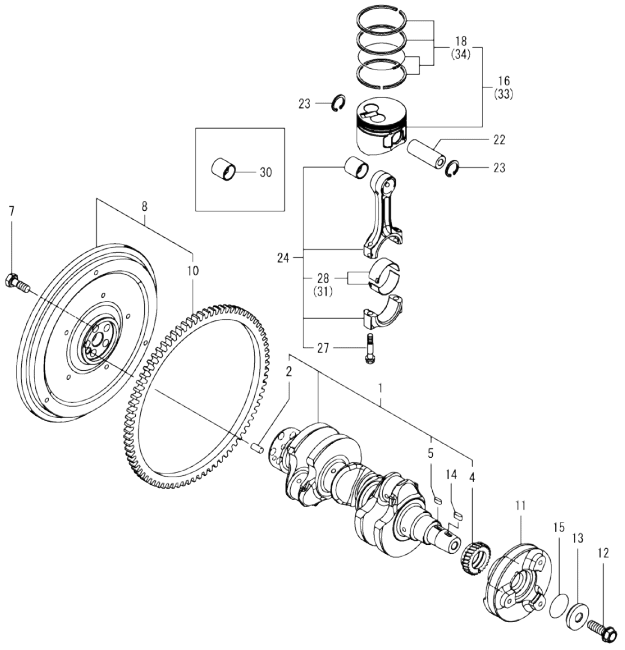

(A)=3TNM68-AZN
(B)=
(C)=
(D)=
(E)=
(F)=

No.	Lev.	Parts No.	Description	Q'ty (A)	(B)	(C)	(D)	(E)	(F)	I	R
1	1	119125-21700	CRANKSHAFT ASSY	1							
2	2	129100-01580	PIN, PARALLEL 8X16	1							
4	2	119125-21200	GEAR, CRANKSHAFT	1							
5	2	22512-040120	KEY, 4X 12	1							
7	1	119620-21500	BOLT, FLYWHEEL	5							
8	1	119127-21590	FLYWHEEL ASSY	1							
10	2	124060-21600	GEAR, RING Z=105	1							
11	1	119125-21660	V-PULLEY, CRANKSHAFT	1							
12	1	119621-21681	BOLT, FLANGE 12X1.25	1							
13	1	119C10-21940	WASHER, V-PULLEY	1							
14	1	22512-050120	KEY, 5X 12	1							
15	1	119C10-21930	GASKET, WASHER	1							
16	1	119125-22080	PISTON ASSY	3							
18	2	119125-22500	RING SET, PISTON	3							
22	1	119125-22300	PIN, PISTON	3							
23	1	22252-000200	RING, 20	6							
24	1	119125-23000	ROD ASSY, CONNECTING	3							
27	2	119717-23200	BOLT, CONNECTING ROD	6							
28	2	119515-23601	BEARING, CRANK PIN	3							
30	1	119260-23910	BEARING, PISTON PIN	3							1
31	1	119515-23611	BEARING ASSY, 0.25	3							2
33	1	119125-22900	PISTON ASSY, 0.25 OS	3							3
34	2	119125-22550	RING SET, 0.25 OS	3							3

Remarks
(1)Spare parts.
(2)Under-sized(U.S.=0.25) parts.
(3)Over-sized(O.S.=0.25) parts.

N:Old $\frac{\text{Yes}}{\text{No}}$ New. Q:Old $\frac{\text{No}}{\text{Yes}}$ New. R:Old $\frac{\text{Yes}}{\text{Yes}}$ New. S:Old $\frac{\text{No}}{\text{No}}$ New. W:Add. Z:Discontinued. F:Interchangeable by set. K:Q'ty Change

Copyright (C) 2017 YANMAR CO., LTD. All RightsReserved.

Fig.8. LUB. OIL SYSTEM

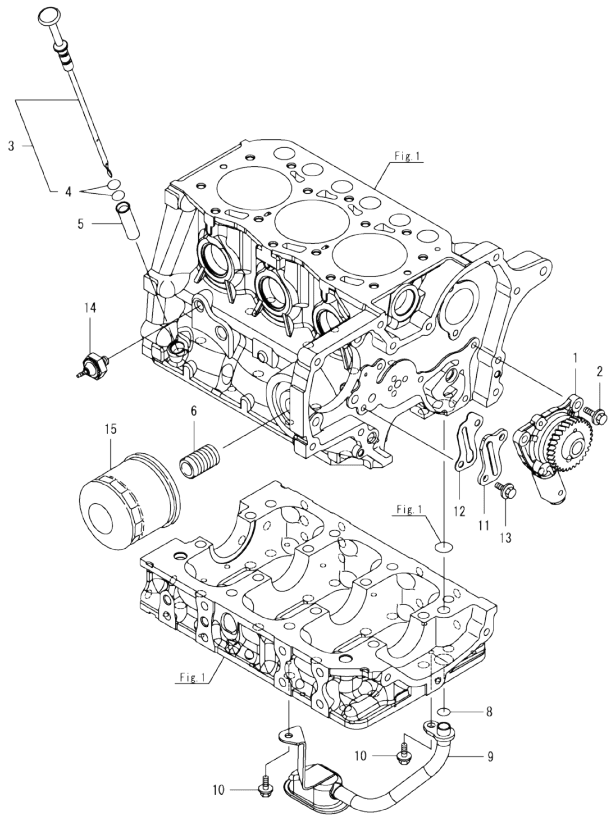

Remarks
(1)Spare parts.

(A)=3TNM68-AZN
(B)=
(C)=
(D)=
(E)=
(F)=

No.	Lev.	Parts No.	Description	Q'ty (A)	(B)	(C)	(D)	(E)	(F)	I	R
1	1	119125-32000	PUMP ASSY, OIL	1							
2	1	26106-060142	BOLT, M6X 14 PLATED	3							
3	1	119125-34800	DIPSTICK	1							
4	2	119125-34900	O-RING	2							
5	1	119125-34810	GUIDE, DIPSTICK	1							
6	1	119717-35140	BOLT, STUD	1							
8	1	119209-35030	O-RING, P11	1							
9	1	119125-35080	PIPE ASSY, OIL INLET	1							
10	1	26106-060102	BOLT, M6X 10 PLATED	2							
11	1	119125-39200	COVER	1							
12	1	119125-39220	GASKET, OIL-PIPE	1							
13	1	26106-060122	BOLT, M6X 12 PLATED	2							
14	1	114250-39450	SWITCH, HYDRAULIC	1							
15	1	119305-35151	FILTER ASSY, D68XL65	1							1

N:Old ←Yes/No→ New. Q:Old ←No/Yes→ New. R:Old ←Yes/Yes→ New. S:Old ←No/No→ New. W:Add. Z:Discontinued. F:Interchangeable by set. K:Q'ty Change

Copyright (C) 2017 YANMAR CO., LTD. All RightsReserved.

Fig.9. COOLING WATER SYSTEM

(A)=3TNM68-AZN
(B)=
(C)=
(D)=
(E)=
(F)=

No.	Lev.	Parts No.	Description	Q'ty (A)	(B)	(C)	(D)	(E)	(F)	I	R
1	1	119125-42000	PUMP ASSY, WATER	1							
3	2	119125-42020	COVER, PUMP	1							
4	2	119125-42030	GASKET, WATER PUMP	1							
9	2	119209-42320	O-RING, P21 EPDM	1							
10	2	26577-060122	SCREW, M6X12	3							
11	2	27241-220000	PLUG, 22	1							
12	1	119260-42021	GASKET, WATER PUMP	1							
13	1	23414-080000	GASKET, 8X1.0	1							
14	1	26106-080122	BOLT, M8X 12 PLATED	1							
15	1	26106-080452	BOLT, M8X 45 PLATED	3							
16	1	119717-42350	V-PULLEY, D=100	1							
17	1	25152-003500	V-BELT, A35	1							
18	1	119258-44740	FAN, COOLING D300	1							
19	1	171353-44760	SPACER, FAN	1							
20	1	26106-060352	BOLT, M6X 35 PLATED	4							
21	1	129350-49530	COVER, THERMOSTAT	1							
22	1	119717-49800	THERMOSTAT, 71C	1							
23	1	26106-080202	BOLT, M8X 20 PLATED	2							
24	1	171056-49120	PLUG, DRAIN R1/4	1							
25	1	121450-42450	PLUG, M16	1							
26	1	124250-49351	SENSOR, WATER TEMP.	1							
27	1	124465-44950	GASKET, 16	1							
28	1	129150-49360	GASKET	1							

N:Old ◄Yes/No► New. Q:Old ◄No/Yes► New. R:Old ◄Yes/Yes► New. S:Old ◄No/No► New. W:Add. Z:Discontinued. F:Interchangeable by set. K:Q'ty Change

Copyright (C) 2017 YANMAR CO., LTD. All RightsReserved.

Fig.10. FUEL INJECTION PUMP

(A)=3TNM68-AZN
(B)=
(C)=
(D)=
(E)=
(F)=

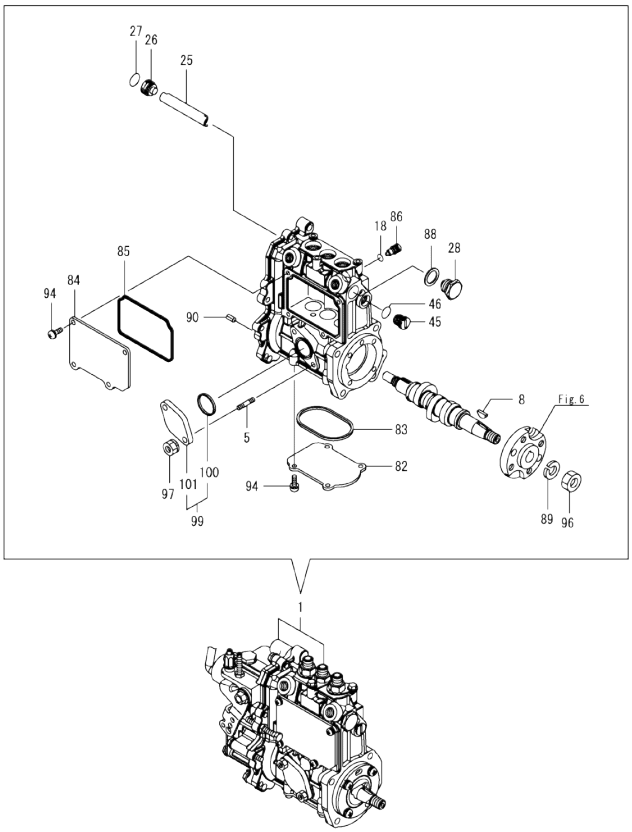

No.	Lev.	Parts No.	Description	Q'ty (A)	(B)	(C)	(D)	(E)	(F)	I	R
1	1	719127-51380	FIE ASSY	1							1
5	2	129155-51020	BOLT, STUD	2							
8	2	122710-51090	FEATHER KEY,WOODRUFF	1							
18	2	129155-51280	O-RING, S6	1							
25	2	129155-51400	DEFLECTOR	1							
26	2	158600-51410	PLUG, DEFLECTOR	1							
27	2	119717-51420	O-RING	1							
28	2	158600-51420	PLUG, DEFLECTOR	1							
45	2	158600-51570	PLUG, RACK	1							
46	2	129155-51580	O-RING	1							
82	2	119125-51700	COVER, PUMP	1							
83	2	119717-51711	GASKET	1							
84	2	119717-51750	COVER	1							
85	2	119717-51761	GASKET	1							
86	2	158600-51790	STOPPER, RACK	1							
88	2	22190-160002	WASHER, SEAL 16	1							
89	2	22217-120000	WASHER, SPRING 12	1							
90	2	22351-050010	PIN, SPRING 5.0X10	2							
94	2	26022-050122	SCREW, M5X12	8							
96	2	26716-120002	NUT, M12	1							
97	2	119717-51860	NUT, M6	2							
99	2	129255-52000	COVER ASSY	1							
100	3	129155-52051	GASKET	1							
101	3	129100-52200	COVER, PUMP	1							

Remarks
(1)Governor(Fig.11) is incorporated in this Fuel Injection Pump(No.1).

N:Old ◄Yes/No► New, Q:Old ◄No/Yes► New, R:Old ◄Yes/Yes► New, S:Old ◄No/No► New, W:Add, Z:Discontinued, F:Interchangeable by set, K:Q'ty Change

Copyright (C) 2017 YANMAR CO., LTD. All RightsReserved.

Fig.11. GOVERNOR

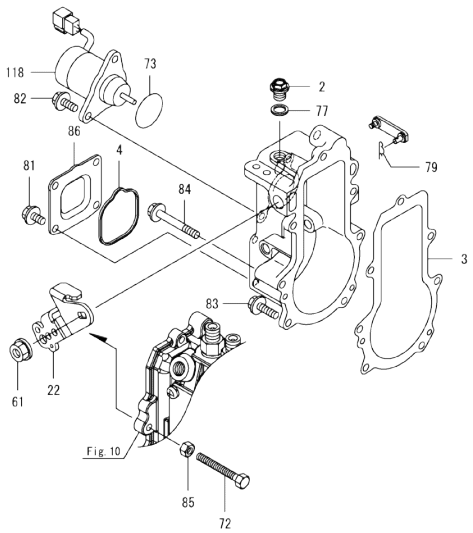

(A)=3TNM68-AZN
(B)=
(C)=
(D)=
(E)=
(F)=

No.	Lev.	Parts No.	Description	Q'ty (A)	(B)	(C)	(D)	(E)	(F)	I	R
2	2	119717-51930	PLUG, M10	1							
3	2	119717-61050	GASKET	1							
4	2	119717-61070	GASKET	1							
22	2	119515-61440	LEVER, CONTROL	1							
61	2	26366-080002	NUT, M8	1							
72	2	129155-61461	BOLT,IDLE LIMIT	1							
73	2	158552-61900	O-RING	1							
77	2	22190-100002	WASHER, SEAL 10	1							
79	2	22372-040000	PIN, SNAP 4	1							
81	2	26106-060102	BOLT, M6X 10 PLATED	4							
82	2	26106-060142	BOLT, M6X 14 PLATED	2							
83	2	26106-060202	BOLT, M6X 20 PLATED	4							
84	2	26106-060452	BOLT, M6X 45 PLATED	3							
85	2	119740-61470	NUT	1							
86	2	119717-61060	COVER, GOVERNOR CASE	1							
118	2	129630-77910	SOLENOID, STOP	1							

Remarks
* This figure(Governor) is incorporated in the Fuel Injection Pump(Fig.10).

N:Old ←Yes/No→ New. Q:Old ←No/Yes→ New. R:Old ←Yes/Yes→ New. S:Old ←No/No→ New. W:Add. Z:Discontinued. F:Interchangeable by set. K:Q'ty Change

Copyright (C) 2017 YANMAR CO., LTD. All RightsReserved.

Fig.12. FUEL INJECTION VALVE

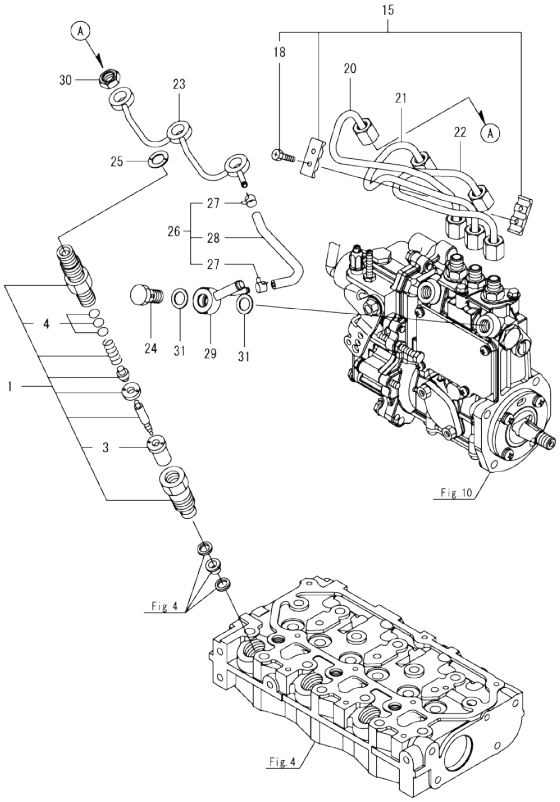

Remarks
(1)Spare parts.

(A)=3TNM68-AZN
(B)=
(C)=
(D)=
(E)=
(F)=

No.	Lev.	Parts No.	Description	Q'ty (A)	(B)	(C)	(D)	(E)	(F)	I	R
1	1	119515-53001	VALVE ASSY,INJECTION	3							
3	2	119515-53010	NOZZLE ASSY, F.I.	3							
4	2	129901-53800	SHIM SET, ADJUSTING	3							1
15	1	129150-59120	RETAINER, PIPE	1							
18	2	129150-59131	BOLT, M4X14	2							
20	1	119125-59810	PIPE, FUEL INJECTION	1							
21	1	119125-59820	PIPE, FUEL INJECTION	1							
22	1	119125-59830	PIPE, FUEL INJECTION	1							
23	1	119125-59540	PIPE ASSY, RETURN	1							
24	1	119125-59560	BOLT, PIPE JOINT	1							
25	1	129901-59560	GASKET	3							
26	1	119125-59570	HOSE ASSY, RETURN	1							
27	2	124066-59100	CLAMP, HOSE 8	2							
28	2	119000-59550	HOSE, FUEL RETURN	1							
29	1	119840-59570	JOINT	1							
30	1	119620-59700	NUT, NOZZLE	3							
31	1	22190-120002	WASHER, SEAL 12	2							

N:Old ←Yes/No→ New. Q:Old ←No/Yes→ New, R:Old ←Yes/Yes→ New, S:Old ←No/No→ New. W:Add. Z:Discontinued. F:Interchangeable by set. K:Q'ty Change

Copyright (C) 2017 YANMAR CO., LTD. All RightsReserved.

Fig.13. FUEL PIPE

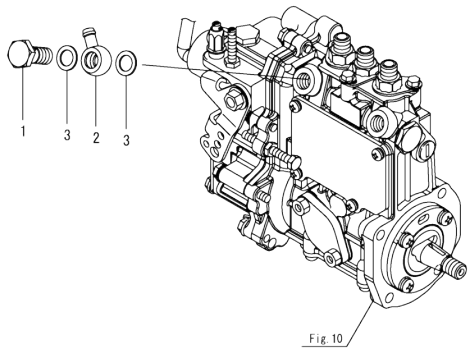

(A)=3TNM68-AZN
(B)=
(C)=
(D)=
(E)=
(F)=

No.	Lev.	Parts No.	Description	Q'ty (A)	(B)	(C)	(D)	(E)	(F)	I	R
1	1	103854-39140	BOLT, PIPE JOINT	1							
2	1	101304-59020	JOINT, PIPE 12	1							
3	1	22190-120002	WASHER, SEAL 12	2							

N:Old ◄Yes/No► New. Q:Old ◄No/Yes► New. R:Old ◄Yes/Yes► New. S:Old ◄No/No► New. W:Add. Z:Discontinued. F:Interchangeable by set. K:Q'ty Change

Copyright (C) 2017 YANMAR CO., LTD. All RightsReserved.

Fig.14. STARTER MOTOR

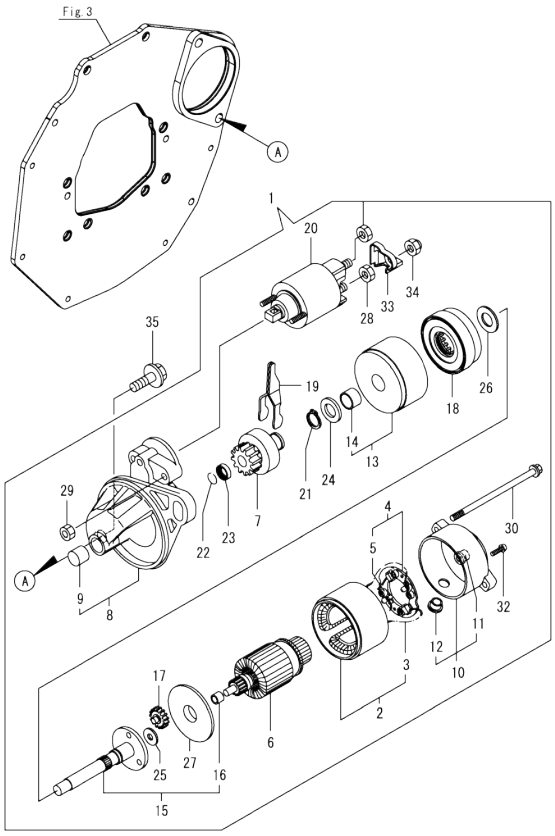

0CD50-M03350 Fig.14

(A)=3TNM68-AZN (D)=
(B)= (E)=
(C)= (F)=

No.	Lev.	Parts No.	Description	Q'ty (A)	(B)	(C)	(D)	(E)	(F)	I	R
1	1	119515-77010	STARTER ASSY	1							
2	2	X0281007680	YOKE ASSY	1							
3	3	X0280996180	STARTER KIT	2							
4	2	X0285105190	HOLDER ASSY	1							
5	3	X0285205030	SPRING	4							
6	2	X0282005871	ARMATURE ASSY	1							
7	2	X0283006960	CLUTCH ASSY	1							
8	2	X4284001590	HOUSING ASSY	1							
9	3	X9491050100	BEARING, NEEDLE	1							
10	2	X0285007030	FRAME ASSY	1							
11	3	X9491040990	BEARING	1							
12	3	X0280626010	COVER	1							
13	2	X0284105040	BEARING ASSY	1							
14	3	X9491034330	BEARING	1							
15	2	X0286105010	SHAFT ASSY	1							
16	3	X9491034320	BEARING	1							
17	2	X0286305010	GEAR	3							
18	2	X0286355010	GEAR	1							
19	2	X0287405140	LEVER	1							
20	2	X0534007800	SWITCH ASSY	1							
21	2	X9055715000	RING	1							
22	2	X9490721360	RING	1							
23	2	X0280210331	NUT	1							
24	2	X9490138110	WASHER	1							
25	2	X9490138090	WASHER	1							
26	2	X9490138100	WASHER	1							
27	2	X0284525010	PLATE	1							
28	2	X9490562360	NUT	1							
29	2	X9490560750	NUT	2							
30	2	X9490423520	BOLT, THROUGH	2							
32	2	X9490065670	SCREW, M4X6	2							
33	2	X0280335360	COVER, TERMINAL	1							
34	2	X1289510130	NUT	1							
35	1	26106-100302	BOLT, M10X 30 PLATED	2							

N:Old ←Yes/No→ New. Q:Old ←No/Yes→ New. R:Old ←Yes/Yes→ New. S:Old ←No/No→ New. W:Add. Z:Discontinued. F:Interchangeable by set. K:Q'ty Change

Copyright (C) 2017 YANMAR CO., LTD. All RightsReserved.

Fig.15. GENERATOR

(A)=3TNM68-AZN
(B)=
(C)=
(D)=
(E)=
(F)=

No.	Lev.	Parts No.	Description	Q'ty (A)	(B)	(C)	(D)	(E)	(F)	I	R
1	1	26106-080202	BOLT, M8X 20 PLATED	1							
2	1	119626-77220	ALTERNATOR, 12V-55A	1							
3	2	X9490561001	NUT	1							
4	2	129052-77380	ROTOR ASSY	1							
5	3	123501-79240	BEARING, BALL	1							
6	3	119620-79250	COVER, BEARING	1							
7	2	129052-77422	FRAME ASSY	1							
8	3	119620-79200	BEARING, BALL	1							
9	3	119620-79210	RETAINER	1							
10	3	119620-79220	SCREW	4							
11	3	119620-79230	BOLT, STUD	2							
12	2	128401-77440	FRAME	1							
13	2	119626-77450	COVER	1							
14	2	119620-77461	PULLEY, GENERATOR	1							
15	2	119620-77471	NUT	1							
16	2	119620-77490	COLLAR	1							
17	2	129423-77720	REGULATOR ASSY	1							
18	2	129052-79260	HOLDER	1							
19	2	129052-79270	HOLDER, BRUSH	1							
20	2	119620-79290	SCREW	6							
21	2	119620-79300	SCREW	1							
22	2	119620-79310	BOLT	3							
23	2	119620-79320	SCREW	2							
24	2	119620-79330	BOLT	2							
25	2	119620-79340	BUSH, INSULATION	1							
26	2	119620-79350	NUT	2							
27	1	26106-100452	BOLT, M10X 45 PLATED	1							
28	1	119125-77320	ADJUSTER, BELT	1							
29	1	124732-77340	SPACER	1							
30	1	129972-77341	BOLT, ADJUST L=50	1							

N:Old ◄Yes/No► New. Q:Old ◄No/Yes► New. R:Old ◄Yes/Yes► New. S:Old ◄No/No► New. W:Add. Z:Discontinued. F:Interchangeable by set. K:Q'ty Change

Copyright (C) 2017 YANMAR CO., LTD. All RightsReserved.

Fig.16. ACCESSORY

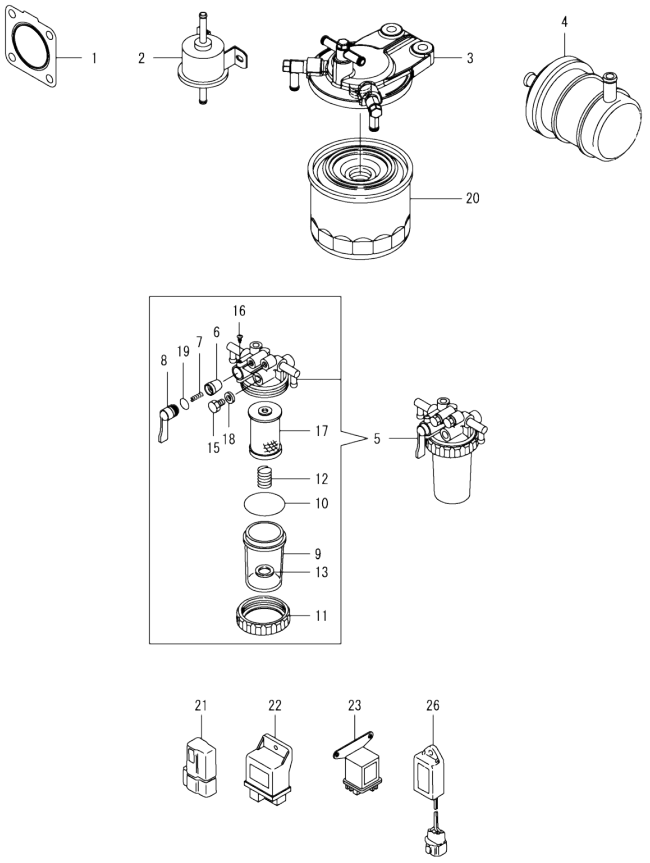

(A)=3TNM68-AZN
(B)=
(C)=
(D)=
(E)=
(F)=

No.	Lev.	Parts No.	Description	Q'ty (A)	(B)	(C)	(D)	(E)	(F)	I	R
1	1	119515-13200	GASKET, SILENCER	1							
2	1	119225-52102	PUMP, FUEL FEED	1							
3	1	119934-55611	BRACKET, FILTER	1							
4	1	129052-55630	FILTER, FUEL	1							
5	1	129335-55701	SEPARATOR ASSY,WATER	1							
6	2	104200-55321	VALVE, TAPER	1							
7	2	104200-55330	SPRING, FUEL VALVE	1							
8	2	104200-55341	HANDLE, COCK	1							
9	2	124064-55510	CUP, FUEL STARINER	1							
10	2	102103-55520	O-RING	1							
11	2	110250-55610	RING, CUP RETAINING	1							
12	2	121257-55720	SPRING, FILTER	1							
13	2	121257-55731	FLOAT	1							
15	2	101720-55750	PLUG, HEXAGON M6	2							
16	2	104200-55750	SCREW, PAN M4	1							
17	2	171081-55910	FILTER, FUEL	1							
18	2	23418-060000	GASKET, 6X1.0	2							
19	2	24311-240100	O-RING, 1AP10A	1							
20	1	119802-55801	FILTER, FUEL	1							
21	1	119643-66900	DIODE	1							
22	1	119802-77200	RELAY, SAFETY	1							
23	1	119650-77911	RELAY ASSY, GLOW	1							
26	1	129211-77920	TIMER	1							

N:Old ←Yes/No→ New. Q:Old ←No/Yes→ New. R:Old ←Yes/Yes→ New. S:Old ←No/No→ New. W:Add. Z:Discontinued. F:Interchangeable by set. K:Q'ty Change

Copyright (C) 2017 YANMAR CO., LTD. All RightsReserved.

Parts No. Index

Parts No.	Fig. No.	Ref. No.
101304-59020	13	2
101720-55750	16	15
102103-55520	16	10
103854-39140	13	1
104200-55321	16	6
104200-55330	16	7
104200-55341	16	8
104200-55750	16	16
105010-11230	4	28
105425-01690	3	5
106760-01770	2	6
	4	33
110250-55610	16	11
114250-39450	8	14
119000-59550	12	28
119125-01330	1	31
119125-01500	2	1
119125-01750	2	2
119125-01770	3	4
119125-01780	3	8
119125-01790	1	32
119125-01800	1	35
119125-01960	1	7
119125-01970	1	5
119125-02061	1	9
119125-02900	1	36
119125-02910	1	39
119125-02930	1	23
119125-02940	1	42
119125-11100	4	13
119125-11110	4	14
119125-11130	4	15
119125-11180	4	16
119125-11190	4	17
119125-11200	4	19
119125-11240	4	20
119125-11260	4	23
119125-11270	4	24
119125-11320	4	44
119125-11330	4	45
119125-11340	4	18
119125-11370	4	46
119125-11380	4	34
119125-11650	4	27
119125-11740	4	4
119125-11800	4	57
119125-13100	5	1
119125-13110	5	2
119125-14580	6	3
119125-21200	7	4

Parts No.	Fig. No.	Ref. No.
119125-21660	7	11
119125-21700	7	1
119125-22080	7	16
119125-22300	7	22
119125-22500	7	18
119125-22550	7	34
119125-22900	7	33
119125-23000	7	24
119125-25050	1	26
119125-25100	6	9
119125-25910	6	14
119125-25930	6	13
119125-32000	8	1
119125-34800	8	3
119125-34810	8	5
119125-34900	8	4
119125-35080	8	9
119125-39200	8	11
119125-39220	8	12
119125-42000	9	1
119125-42020	9	3
119125-42030	9	4
119125-51700	10	82
119125-51800	1	34
119125-59540	12	23
119125-59560	12	24
119125-59570	12	26
119125-59810	12	20
119125-59820	12	21
119125-59830	12	22
119125-77320	15	28
119125-77800	4	55
119125-77820	4	56
119127-01560	1	1
119127-21590	7	8
119131-18320	5	5
119209-35030	8	8
119209-42320	9	9
119225-52102	16	2
119226-07900	4	53
119258-44740	9	18
119260-11270	4	25
119260-11280	4	26
119260-11370	4	1
119260-14200	6	1
119260-14400	6	2
119260-23910	7	30
119260-42021	9	12
119266-01200	1	30
119305-35151	8	15

Parts No.	Fig. No.	Ref. No.
119515-13200	16	1
119515-23601	7	28
119515-23611	7	31
119515-53001	12	1
119515-53010	12	3
119515-61440	11	22
119515-77010	14	1
119600-11460	4	3
119620-01620	1	13
119620-21500	7	7
119620-59700	12	30
119620-77461	15	14
119620-77471	15	15
119620-77490	15	16
119620-79200	15	8
119620-79210	15	9
119620-79220	15	10
119620-79230	15	11
119620-79250	15	6
119620-79290	15	20
119620-79300	15	21
119620-79310	15	22
119620-79320	15	23
119620-79330	15	24
119620-79340	15	25
119620-79350	15	26
119621-21681	7	12
119626-77220	15	2
119626-77450	15	13
119643-66900	16	21
119650-77911	16	23
119717-01800	2	3
119717-03031	4	35
119717-03070	4	36
		37
119717-13600	5	3
119717-23200	7	27
119717-35140	8	6
119717-42350	9	16
119717-49800	9	22
119717-51150	6	15
119717-51420	10	27
119717-51711	10	83
119717-51750	10	84
119717-51761	10	85
119717-51860	10	97
119717-51930	11	2
119717-61050	11	3
119717-61060	11	86
119717-61070	11	4

Parts No.	Fig. No.	Ref. No.
119734-02220	1	33
119740-61470	11	85
119802-03100	4	38
119802-03110	4	39
119802-03121	4	40
119802-03131	4	41
119802-03141	4	42
119802-55801	16	20
119802-77200	16	22
119840-59570	12	29
119934-55611	16	3
119C10-21930	7	15
119C10-21940	7	13
119D00-01660	3	2
121257-55720	16	12
121257-55731	16	13
121450-42450	9	25
122710-51090	10	8
123501-79240	15	5
124060-01050	1	4
124060-21600	7	10
124064-55510	16	9
124066-59100	12	27
124250-49351	9	26
124465-44950	9	27
124732-77340	15	29
128401-77440	15	12
129052-55630	16	4
129052-77380	15	4
129052-77422	15	7
129052-79260	15	18
129052-79270	15	19
129100-01580	3	1
	7	2
129100-52200	10	101
129150-25301	6	12
129150-49360	9	28
129150-59120	12	15
129150-59131	12	18
129155-51020	10	5
129155-51280	10	18
129155-51400	10	25
129155-51580	10	46
129155-52051	10	100
129155-61461	11	72
129211-77920	16	26
129255-52000	10	99
129335-55701	16	5
129350-49530	9	21
129423-77720	15	17

Parts No. Index

Parts No.	Fig. No.	Ref. No.
129630-77910	11	118
129900-32040	1	27
129901-11450	4	2
129901-53800	12	4
129901-59560	12	25
129972-77341	15	30
129E00-13610	5	4
158552-61900	11	73
158600-51410	10	26
158600-51420	10	28
158600-51570	10	45
158600-51790	10	86
171056-49120	9	24
171081-55910	16	17
171353-44760	9	19
22190-100002	11	77
22190-120002	12	31
	13	3
22190-160002	3	7
	10	88
22217-120000	10	89
22242-000100	4	31
22252-000200	7	23
22351-050010	10	90
22351-060012	1	28
22372-040000	11	79
22512-040120	7	5
22512-050120	7	14
22857-500100	4	47
		48
23414-080000	9	13
23418-060000	16	18
23876-005000	1	10
	4	11
24311-000180	2	7
	4	50
24311-240100	16	19
25152-003500	9	17
26022-050122	10	94
26106-060102	8	10
	11	81
26106-060122	6	8
	8	13
26106-060142	8	2
	11	82
26106-060202	4	51
	11	83
26106-060352	9	20
26106-060402	1	29
26106-060452	11	84

Parts No.	Fig. No.	Ref. No.
26106-060802	4	52
26106-080122	9	14
26106-080162	4	54
26106-080202	9	23
	15	1
26106-080352	2	4
26106-080452	2	5
	4	32
	9	15
26106-100302	14	35
26106-100452	15	27
26206-100202	3	3
26306-080002	5	6
26366-080002	11	61
26476-060202	4	49
26577-060122	9	10
26716-120002	10	96
26856-060002	4	30
27241-220000	9	11
27241-300000	1	11
27241-350000	4	12
27241-450000	1	12
719127-51380	10	1
X0280210331	14	23
X0280335360	14	33
X0280626010	14	12
X0280996180	14	3
X0281007680	14	2
X0282005871	14	6
X0283006960	14	7
X0284105040	14	13
X0284525010	14	27
X0285007030	14	10
X0285105190	14	4
X0285205030	14	5
X0286105010	14	15
X0286305010	14	17
X0286355010	14	18
X0287405140	14	19
X0534007800	14	20
X1289510130	14	34
X4284001590	14	8
X9055715000	14	21
X9490065670	14	32
X9490138090	14	25
X9490138100	14	26
X9490138110	14	24
X9490423520	14	30
X9490560750	14	29
X9490561001	15	3

Parts No.	Fig. No.	Ref. No.
X9490562360	14	28
X9490721360	14	22
X9491034320	14	16
X9491034330	14	14
X9491040990	14	11
X9491050100	14	9

Parts No.	Fig. No.	Ref. No.